IP-COM

Quick Installation Guide

L3 Managed PoE Switch
G5328P-24-410W/G5310P-8-150W

Package contents

- Switch x 1
- Power cord x 1
- L-shaped bracket x 2
- Screw (KM3*8 mm) x 8
- Footpad x 4
- Quick installation guide x 1
- Console cable x 1 (only provided with G5328P-24-410W)

This guide instructs how to install, connect and log in to the device with the example of G5328P-24-410W. For details, please download the user guide of the device.

Technical Support
IP-COM Networks Co., Ltd.
Address: Room 101, Unit A, First Floor, Tower E3, NO.1001, Zhongshanyuan Road, Nanshan District, Shenzhen, China. 518052
Tel: (86755) 2765 3089
Email: info@ip-com.com.cn
Website: www.ip-com.com.cn

Copyright
©2020 IP-COM Networks Co., Ltd. All rights reserved.
This documentation (including pictures, images, and product specifications, etc.) is for reference only. To improve internal design, operational function, and/or reliability, IP-COM reserves the right to make changes to the products described in this document without obligation to notify any person or organization of such revisions or changes.

Chapter 1 Device installation

1.1 Safety precautions

Follow the notes below to avoid device damages or personal injuries caused by improper operations.

- Wear the ESD bracelet or gloves before installation and do **NOT** power on the switch before finishing installation.
- Use the included power cord to supply power to the switch.
- Make sure that the input voltage matches the value of the switch specified in this guide.
- Do **NOT** block any ventilation openings.
- Do **NOT** remove the housing of the switch.
- Keep the operating environment clean, and regularly clean the switch.
- Disconnect the switch from the power supply before cleaning it. Do **NOT** scrub the switch with any liquid.
- Position the switch away from power line, electric lamp, or power system.
- Do **NOT** place any heavy item on top of the switch.
- If an outdoor cable is required, check whether the signal surge protector and AC surge arrester are connected to the switch.

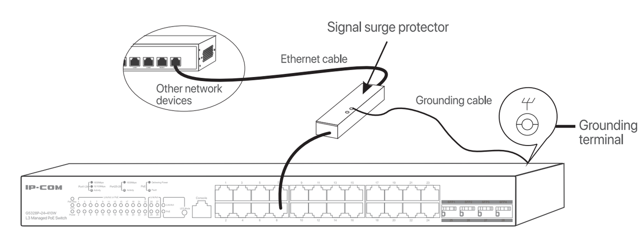

Note: There is a void sticker covering one of the screws on the housing of the switch. Do **NOT** remove the sticker without permission of the local agent. Otherwise you shall be responsible for any damage.

1.2 Preparing for installation

- Rack mounting: ESD bracelet or gloves, screwdriver, 4 screws (suitable for securing the switch to the rack)
- Wall mounting: ESD bracelet or gloves, marker, hammer drill, rubber hammer, 4 expansion bolts (M5*40 mm), screwdriver, 4 screws (PA 5*25 mm, head diameter: 10 mm)
- Desktop mounting: ESD bracelet or gloves

1.3 Installation

• Mounting to a standard 19-inch rack

Step 1 Ensure that the rack is stable and level, and is properly grounded.

Step 2 Fix the 2 L-shaped brackets to both sides of the switch with the included screws.

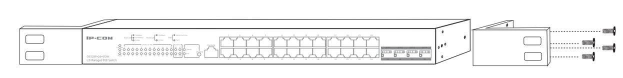

Step 3 Mount the switch at a proper height on the rack and fix the L-shaped brackets to the rack with screws (not included). Ensure that the switch is stable on the rack.

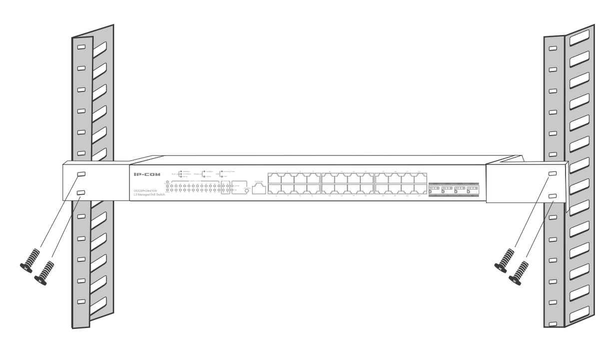

• Mounting to the wall

Step 1 Fix the 2 L-shaped brackets (rotated by 90 degrees) to both sides of the switch with the included screws.

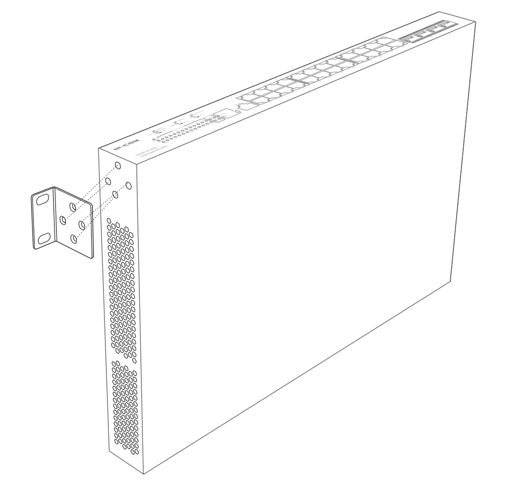

Step 2 Place the switch horizontally onto the wall with its RJ45 ports facing upward, and then mark the positions of the screw holes with the marker.

Step 3 Drill holes in the marked positions, and then hammer the expansion bolts into the holes.

Step 4 Secure the screws (self-prepared) passing through the L-brackets into the expansion bolts with a screwdriver. Ensure that the switch is installed firmly with its RJ45 ports facing upward.

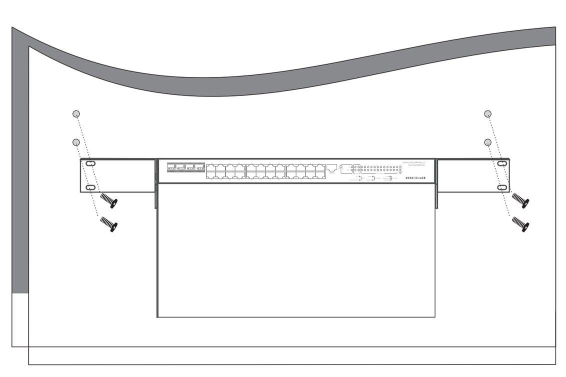

Note: Do **NOT** install the switch with its ventilation openings facing downward, otherwise there will be potential safety hazards.
This switch can only be installed on a concrete or non-flammable wall.

• Mounting on the desktop

Paste the four footpad stickers to the corresponding four recesses on the bottom of the switch. Then turn the switch upside down, and place it on a big enough, clean, stable and flat desktop.

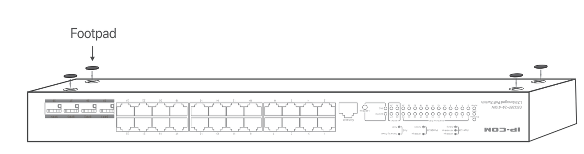

1.4 Grounding

Grounding is important for lightning protection, anti-interference, and personal safety.

Step 1 Connect one end of the grounding cable to the grounding terminal of the switch.
Step 2 Connect the other end of the grounding cable to another grounded device or to the binding post on the grounding bar.

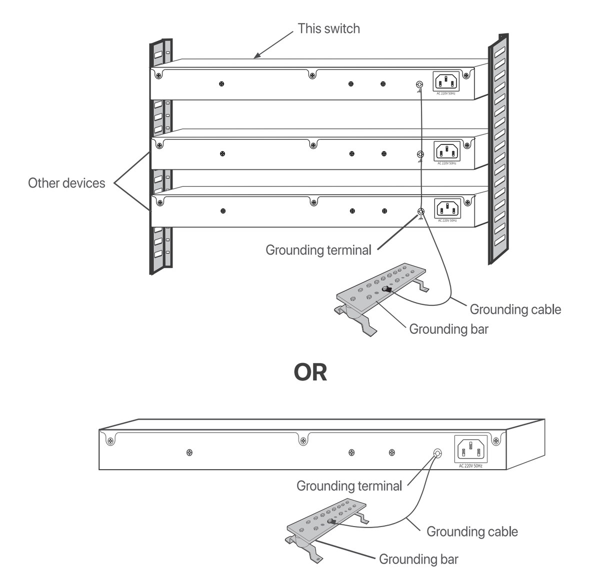

Note: Connect the grounding cable to the grounding system in the equipment room. Do **NOT** connect it to a fire hose or lightning rod.

Chapter 2 Physical connection

Refer to the following network topology to connect the switch to other network devices.

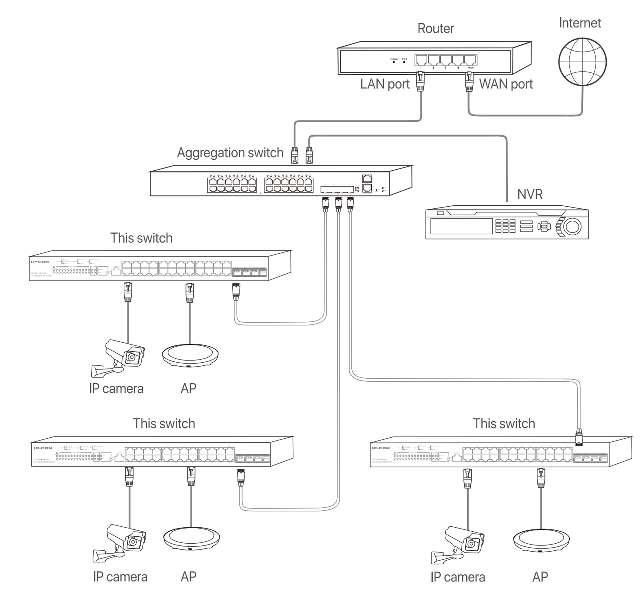

Tips
The switch supports auto MDI/MDIX, so both a straight cable and a crossover cable can be used to connect the switch to Ethernet devices.

Chapter 3 Login

After connection, please check whether the switch is connected properly or adjust the operating mode of the switch according to the following table.

LED indicator/button	Description
PoE-Max	**Solid on:** The total output power of the switch reaches the maximum value. **Off:** The total output power of the switch does not reach the maximum value.
SYS	**Blinking:** The system works properly. **Solid on:** The system is not working properly. **Off:** The system is starting up or not working properly.
Power	**Solid on:** The switch is powered on properly. **Off:** The switch is not powered on, or not powered on properly.
Link/Act or PoE	**Link/Act** and **PoE** multipurpose LED indicator. It indicates the connection status or PoE power supply status of RJ45 ports based on the converted mode of the **LED Mode** (or **LED/Reset**) button. - When the **Link/Act** LED indicator of **LED Mode** (or **LED/Reset**) is solid on, the descriptions of the **Link/Act or PoE LED** indicators are shown as follows: **Solid on:** The port is connected to a device, but no data is being transmitted over the port. **Blinking:** Data is being transmitted over the port. **Off:** The port is not connected or is not connected properly. Green light indicates that the negotiation rate of the port is 1000 Mbps, and orange light indicates a rate of 10 Mbps or 100 Mbps. - When the **PoE** LED indicator of **LED Mode** (or **LED/Reset**) is solid on, the descriptions of the **Link/Act or PoE** LED indicators are shown as follows: **Solid orange:** The port supplies PoE power to a device properly. **Blinking orange:** The port is not supplying PoE power to a device properly. **Off:** The port does not supply PoE power.
Link/Act	**Solid on:** The port is connected, but no data is being transmitted over the port. **Blinking:** Data is being transmitted over the port. **Off:** The port is not connected or is not connected properly.
LED Mode (or LED/Reset)	This multipurpose button is for both LED indicator converting and reset. - Press the **LED Mode** (or **LED/Reset**) button to convert the mode of the **Link/Act or PoE** LED indicator. ● When the **Link/Act** LED indicator of **LED Mode** (or **LED/Reset**) is solid on, the **Link/Act or PoE** LED indicator is in the **Link/Act** mode. ● When **PoE** LED indicator of **LED Mode** (or **LED/Reset**) is solid on, the **Link/Act or PoE** LED indicator is in the **PoE** mode. - When the **SYS** LED indicator is blinking, press and hold the **LED Mode** (or **LED/Reset**) button for about 10 seconds, and then release when all indicators are solid on. When the SYS LED indicator blinks again, the switch is restored to factory settings.

Step 1 Use an Ethernet cable to connect the computer to one of the ports 1 - 24 (1 - 9 for G5310P-8-150W) of the switch.

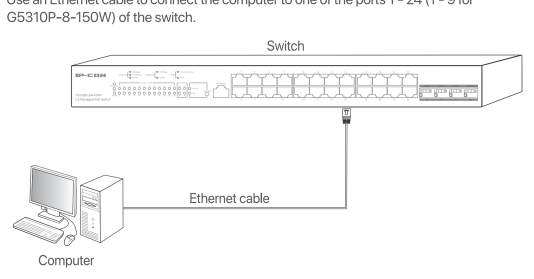

Step 2 Set the IP address of the computer to the same network segment of the switch's IP address. The default IP address of the switch is **192.168.0.1**. You can set the IP address of the computer to 1**92.168.0.*X*** (*X* ranges from 2 to 254 and is not occupied) and the subnet mask to **255.255.255.0**.

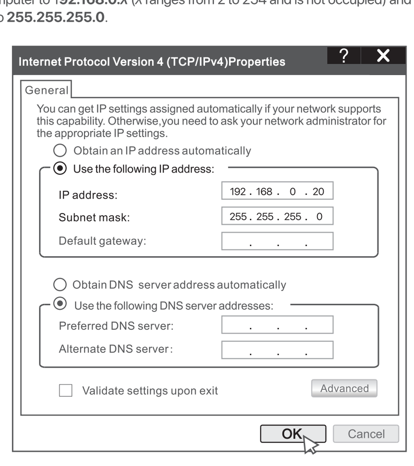

Step 3 Start a web browser (such as Chrome) on the computer, and enter the default IP address of the switch (default: **192.168.0.1**) in the address bar, and press **Enter** on the keyboard.

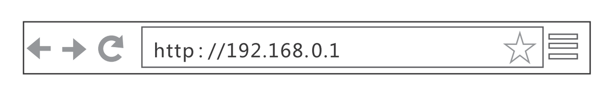

Step 4 On the login page of the switch, enter the login user name and password (both are **admin** by default), and click **Login**.

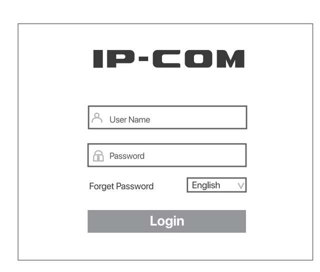

Tips
If you fail to access the above page, please refer to **question 1** in **FAQ**.

After successfully logging in to the web UI of the switch, you can configure the switch now.

FAQ

1. I cannot log in to the web UI of the switch. What should I do?

Try the following solutions:
- Check whether the switch is powered on properly: The **Power** LED indicator is solid on.
- Check whether the computer is connected to the switch properly.
- Check whether the IP address of Ethernet (or Local Area Connection) of the computer is set to **192.168.0.*X*** (X ranges from 2 to 254 and is not occupied).
- Clear the cache of the web browser or try another web browser.
- Disable the firewall of the computer, or try another computer.
- Check whether only one device with the IP address 192.168.0.1 exists in the local network.
- If the problem persists, reset the switch and try again.
  Reset method: When the **SYS** LED indicator is blinking, press and hold the **LED Mode** (or **LED/Reset**) button for about 10 seconds, and then release when all indicators are solid on. When the **SYS** LED indicator blinks again, the switch is restored to factory settings.

2. I forget the login user name and password when logging in to the web UI. What should I do?

Try entering the default login user name and password (both are admin). If failed still, reset the switch, and then use the default user name and password to log in.

3. How do I connect the switch through the Console port?

Please operate as follows:
Step 1 Connect the computer and the Console port of the switch with the included Console cable.
Step 2 Run the serial interface connection software (such as Putty) on the computer. Enter **115200** in the **Speed** box and select **Serial** as the **Connection type**. Then click **Open** on the lower right corner.

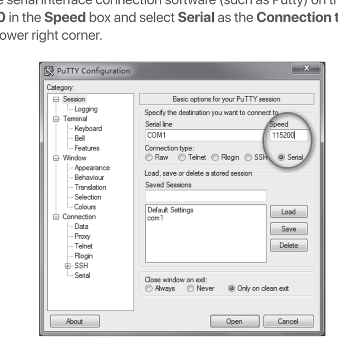

Step 3 Press **Enter** twice and enter the user name and password of the switch (both are admin by default) on the page to enter the command-line interface of the switch.

Specifications — English

Model		G5310P-8-150W	G5328P-24-410W
Port	10/100/1000 Mbps RJ45 port	9	24
	1000 Mbps SFP port	1 independent SFP port	4 independent SFP ports
	Console port	/	1; Baud rate: 115200
Performance	Switching mode	Store-and-forward	
	MAC address table learning	Auto aging, auto learning	
	MAC address table	16 K	
Dimensions (L x W x H)		294 mm x 179.6 mm x 44 mm	440 mm x 284 mm x 44 mm
AC input		100 - 240V AC, 50/60Hz, 2A max	100 - 240V AC, 50/60Hz, 6A
PoE power supply	PoE standard	IEEE 802.3af, IEEE 802.3at	
	PoE power cable core	8 cores: voltage of cores 1, 2, 4, 5 is +, and cores 3, 6, 7, 8 is -	
	PoE port	1 - 8	1 - 24
	Maximum output power of a single port	30 W	30 W
	Maximum output power of the switch	130 W	370 W
Lightning protection	RJ45 port	Common mode: 6 kV	
	Power supply	Common mode: 6 kV; Differential mode: 4 kV	
Operating environment		Temperature: 0°C - 40°C Humidity: (10% - 90%) RH, non-condensing	Temperature: 0°C - 45°C Humidity: (10% - 90%) RH, non-condensing
Storage environment		Temperature: -40°C - 70°C Humidity: (5% - 90%) RH, non-condensing	
Data transmission rate		Ethernet: 10 Mbps (half duplex)/20 Mbps (full duplex) Fast Ethernet: 100 Mbps (half duplex)/200 Mbps (full duplex) Gigabit Ethernet: 2000 Mbps (full duplex)	
Transmission media		Ethernet: CAT3 UTP/STP or better Fast Ethernet: CAT5 UTP/STP or better Gigabit Ethernet: CAT5e or CAT6 UTP/STP	
Standards		IEEE 802.3, IEEE 802.3u, IEEE 802.3x, IEEE 802.3ab, IEEE 802.3z, IEEE 802.1d, IEEE 802.1p, IEEE 802.1q, IEEE 802.1w, IEEE 802.1s	

Характеристики — Русский

Модель		G5310P-8-150W	G5328P-24-410W
Интерфейс	Порт RJ45 10/100/1000 Мбит/с	9	24
	Порт SFP 1000 Мбит/с	1 независимый SFP порт	4 независимых SFP порта
	Консольный порт	/	1; Скорость передачи в бодах: 115200
выполнение	Режим переключения	Сохранение и дальнейшая передача	
	Изучение MAC-адресов	Автоматическое старение, автоматическое обучение	
	Таблица MAC-адресов	16 K	
Размеры (Д x Ш x В)		294 мм x 179.6 мм x 44 мм	440 мм x 284 мм x 44 мм
Ввод переменного тока		100 - 240V AC, 50/60Hz, макс. 2A	100 - 240V AC, 50/60Hz, 6A
Электропитание PoE	Стандарт PoE	IEEE 802.3af, IEEE 802.3at	
	Жила силового кабеля PoE	8 ядер: напряжение ядер 1, 2, 4, 5 — "+", а для ядер 3, 6, 7, 8 — "-".	
	PoE-порт	1 - 8	1 - 24
	Максимальная выходная мощность одного порта	30 W	30 W
	Максимальная выходная мощность коммутатора	130 W	370 W
Молниезащита	Порт RJ45	Обычный режим: 6 kV	
	Источник питания	Обычный режим: 6 kV; Дифференциальный режим: 4 kV	
Рабочая среда		Температура: 0°C - 40°C Влажность: (10–90%) без конденсации	Температура: 0°C - 45°C Влажность: (10–90%) без конденсации
Условия хранения		Температура: -40°C - 70°C Влажность: (5–90%) без конденсации	
Скорость передачи информации		Ethernet: 10 Mbps (полудуплексный)/20 Mbps (полнодуплексный) Fast Ethernet: 100 Mbps (полудуплексный)/ 200 Mbps (полнодуплексный) Gigabit Ethernet: 2000 Mbps (полнодуплексный)	
Средства передачи		Ethernet: Кабель CAT3 UTP/STP или выше Fast Ethernet: Кабель CAT5 UTP/STP или выше Gigabit Ethernet: Кабель CAT5E или CAT6 UTP/STP	
Стандарты		IEEE 802.3, IEEE 802.3u, IEEE 802.3x, IEEE 802.3ab, IEEE 802.3z, IEEE 802.1d, IEEE 802.1p, IEEE 802.1q, IEEE 802.1w, IEEE 802.1s	

Спецификации — Български

Модел		G5310P-8-150W	G5328P-24-410W
Порт	10/100/1000 Mbps RJ45 порт	9	24
	1000 Mbps SFP порт	1 независим SFP порт	4 независими SFP порта
	Конзолен порт	/	1; Скорост на боуд: 115200
Технически показатели	Режим на превключване	Съхраняване и препращане	
	Таблица с MAC адреси, обучение	Автоматично навършени, автоматично обучение	
	Таблица с MAC адреси	16 K	
Размери (Д x Ш x В)		294 mm x 179.6 mm x 44 mm	440 mm x 284 mm x 44 mm
AC вход		100 – 240 V AC, 50/60 Hz, 2 A макс.	100 – 240 V AC, 50/60 Hz, 6 A
PoE захранване	PoE стандарт	IEEE 802.3af, IEEE 802.3at	
	PoE захранващо кабелно ядро	8 ядра: напрежение на ядра 1, 2, 4, 5 е +, и ядра 3, 6, 7, 8 е -	
	PoE порт	1 - 8	1 - 24
	Максимална изходна мощност на един порт	30 W	30 W
	Максимална изходна мощност на превключвателя	130 W	370 W
Мълниезащита	RJ45 порт	Общ режим: 6 kV	
	Захранване	Общ режим: 6 kV; Диференциален режим: 4 kV	
Работна среда		Температура: 0°C – 40°C Влажност: (10% – 90%) RH, некондензиращи	Температура: 0°C - 45°C Влажност: (10% – 90%) RH, некондензиращи
Среда за съхранение		Температура: -40°C - 70°C Влажност: (5% – 90%) RH, некондензиращи	
Скорост на предаване на данни		Ethernet: 10 Mbps (полудуплекс)/20 Mbps (пълен дуплекс) Бърз Ethernet: 100 Mbps (полудуплекс)/200 Mbps (пълен дуплекс) Гигабитен Ethernet: 2000 Mbps (пълен дуплекс)	
Среда на предаване		Ethernet: CAT3 UTP/STP или по-добре Бърз Ethernet: CAT5 UTP/STP или по-добре Гигабитен Ethernet: CAT5e или CAT6 UTP/STP	
Стандарти		IEEE 802.3, IEEE 802.3u, IEEE 802.3x, IEEE 802.3ab, IEEE 802.3z, IEEE 802.1d, IEEE 802.1p, IEEE 802.1q, IEEE 802.1w, IEEE 802.1s	

Spezifikationen — Deutsch

Modell		G5310P-8-150W	G5328P-24-410W
Port	10/100/1000 Mbit/s RJ45-Port	9	24
	1000 Mbit/s SFP-Port	1 unabhängiger SFP-Port	4 unabhängige SFP-Ports
	Konsolen-Anschluss	/	1; Baudrate: 115200
Leistung	Modus wechseln	Speichern und weiterleiten	
	MAC-Adressentabelle lernen	Automatisches Altern, automatisches Lernen	
	MAC-Adressentabelle	16 K	
Abmessungen (L x B x H)		294 mm x 179.6 mm x 44 mm	440 mm x 284 mm x 44 mm
AC-Eingang		100 - 240 V AC, 50/60 Hz, 2 A max	100 - 240 V AC, 50/60 Hz, 6A
PoE-Stromversorgung	PoE-Standard	IEEE 802.3af, IEEE 802.3at	
	Anzahl der PoE Netzkabeladern	8 Kerne: Spannung der Kerne 1, 2, 4, 5 ist „+". Bei den Kernen 3, 6, 7, 8 ist sie „-".	
	PoE-Port	1 - 8	1 - 24
	Maximale Leistung eines einzelnen Ports	30 W	30 W
	Maximale Leistung vom Switch	130 W	370 W
Blitzschutz	RJ45-Port	Normaler Modus: 6 kV	
	Stromversorgung	Normaler Modus: 6 kV; Differentialmodus: 4 kV	
Betriebsumgebung		Temperatur: 0°C - 40°C Luftfeuchtigkeit: (10 % - 90 %) RH, nicht kondensierend	Temperatur: 0°C - 45°C Luftfeuchtigkeit: (10 % - 90 %) RH, nicht kondensierend
Lagerumgebung		Temperatur: -40°C - 70°C Luftfeuchtigkeit: (5% - 90 %) RH, nicht kondensierend	
Datenübertragungsrate		Ethernet: 10 Mbit/s (Halbduplex)/20 Mbit/s (Vollduplex) Fast Ethernet: 100 Mbit/s (Halbduplex)/200 Mbit/s (Vollduplex) Gigabit Ethernet: 2000 Mbit/s (Vollduplex)	
Übertragungsmedien		Ethernet: CAT3 UTP/STP-Kabel oder höher Fast Ethernet: CAT5 UTP/STP-Kabel oder höher Gigabit Ethernet: CAT5E oder CAT6 UTP/STP Kabel	
Standards		IEEE 802.3, IEEE 802.3u, IEEE 802.3x, IEEE 802.3ab, IEEE 802.3z, IEEE 802.1d, IEEE 802.1p, IEEE 802.1q, IEEE 802.1w, IEEE 802.1s	

Specifiche — Italiano

Modello		G5310P-8-150W	G5328P-24-410W
Porte	Porta RJ45 10/100/1000 Mbps	9	24
	Porta SFP 1000 Mbps	1 porta SFP indipendente	4 porte SFP indipendenti
	Porta console	/	1; Velocità: 115200
Prestazioni	Modalità switching	Store-and-forward	
	Apprendimento degli indirizzi MAC	Auto invecchiamento, auto apprendimento	
	Tabella degli indirizzi MAC	16 K	
Dimensioni (L x P x A)		294 mm x 179.6 mm x 44 mm	440 mm x 284 mm x 44 mm
Ingresso CA		100 - 240V CA, 50/60Hz, 2A max	100 - 240 V CA, 50/60Hz, 6A
Alimentazione PoE	Standard PoE	IEEE 802.3af e IEEE 802.3at	
	Nucleo del cavo di alimentazione PoE	8 nuclei: la tensione dei nuclei 1, 2, 4, 5 è +; quella dei nuclei 3, 6, 7, 8 è -.	
	Porta PoE	1 - 8	1 - 24
	Resa massima di una singola porta	30 W	30 W
	Resa massima dell'interruttore	130 W	370 W
Protezione contro i fulmini	Porta RJ45	Modalità comune: 6 kV	
	Alimentazione	Modalità comune: 6 kV; Modalità differenziale: 4 kV	
Ambiente operativo		Temperatura: 0°C - 40 °C Umidità: 10% - 90% UR, senza condensa	Temperatura: 0°C - 45 °C Umidità: 10% - 90% UR, senza condensa
Ambiente di immagazzinaggio		Temperatura: -40°C - 70°C Umidità: (5% - 90%) UR, senza condensa	
Ottimizza velocità di trasmissione		Ethernet: 10 Mbps (half duplex) / 20 Mbps (full duplex) Fast Ethernet: 100 Mbps (half duplex) / 200 Mbps (full duplex) Gigabit Ethernet: 2000 Mbps (full duplex)	
Mezzi di trasmissione		Ethernet: Cavo UTP/STP CAT3 o superiore Fast Ethernet: Cavo UTP/STP CAT5 o superiore Gigabit Ethernet: Cavo UTP/STP CAT5e o CAT6	
Standard		IEEE 802.3, IEEE 802.3u, IEEE 802.3x, IEEE 802.3ab, IEEE 802.3z, IEEE 802.1d, IEEE 802.1p, IEEE 802.1q, IEEE 802.1w, IEEE 802.1s	

Especificações — Português

Modelo		G5310P-8-150W	G5328P-24-410W
Porta	Porta RJ45 10/100/1000 Mbps	9	24
	Porta SPF 1000 Mbps	1 porta SFP independente	4 portas SFP independentes
	Porta da consola	/	1; Taxa de Baud: 115200
Desempenho	Modo de comutação	Guardar e reencaminhar	
	Aprendizagem de endereços MAC	Envelhecimento automático, aprendizagem automática	
	Tabela de endereços MAC	16 K	
Dimensões (C x L x A)		294 mm x 179.6 mm x 44 mm	440 mm x 284 mm x 44 mm
Entrada AC		100 - 240 V AC, 50/60 Hz, 2 A máx.	100 - 240 V AC, 50/60 Hz, 6 A
Fonte de alimentação PoE	Norma PoE	IEEE 802.3af, IEEE 802.3at	
	Núcleo de cabo de energia PoE	8 núcleos: a tensão dos núcleos 1, 2, 4, 5 é superior e a dos núcleos 3, 6, 7, 8 é -.	
	Porta de PoE	1 - 8	1 - 24
	Saída máxima de uma única porta	30 W	30 W
	Saída máxima do comutador	130 W	370 W
Proteção contra raios	Porta RJ45	Modo comum: 6 kV	
	Fonte de energia	Modo comum: 6 kV; Modo diferencial: 4 kV	
Ambiente operacional		Temperatura: 0°C - 40°C Humidade: (10% - 90%) de HR, sem condensação	Temperatura: 0°C - 45°C Humidade: (10% - 90%) de HR, sem condensação
Ambiente de armazenamento		Temperatura: -40°C - 70°C Humidade: (5% - 90%) de HR, sem condensação	
Taxa de transmissão de dados		Ethernet: 10 Mbps (half duplex)/20 Mbps (full duplex) Ethernet rápida: 100 Mbps (half duplex)/200 Mbps (full duplex) Gigabit Ethernet: 2000 Mbps (full duplex)	
Meios de transmissão		Ethernet: Cabo CAT3 UTP/STP ou superior Ethernet rápida: Cabo CAT5 UTP/STP ou superior Gigabit Ethernet: Cabo CAT5E ou CAT6 UTP/STP	
Normas		IEEE 802.3, IEEE 802.3u, IEEE 802.3x, IEEE 802.3ab, IEEE 802.3z, IEEE 802.1d, IEEE 802.1p, IEEE 802.1q, IEEE 802.1w, IEEE 802.1s	

Especificaciones — Español

Modelo		G5310P-8-150W	G5328P-24-410W
Puerto	Puerto RJ45 de 10/100/1000 Mbps	9	24
	Puerto SFP de 1000 Mbps	1 puerto SFP independiente	4 puertos SFP independientes
	Puerto de consola	/	1; Velocidad en baudios: 115200
Rendimiento	Modo de conmutación	Almacenar y retransmitir	
	Aprendizaje de direcciones MAC	Vencimiento automático, aprendizaje automático	
	Tabla de direcciones MAC	16 K	
Dimensiones (L x An x Al)		294 mm x 179.6 mm x 44 mm	440 mm x 284 mm x 44 mm
Entrada de CA		100 - 240 V CA, 50/60 Hz, 2 A máx.	100 - 240 V CA, 50/60 Hz, 6 A
Fuente de alimentación PoE	Estándar de PoE	IEEE 802.3af, IEEE 802.3at	
	Núcleo del cable de alimentación PoE	8 núcleos: el voltaje de los núcleos 1, 2, 4 y 5 es +, y el de los núcleos 3, 6, 7 y 8 es -.	
	Puerto PoE	1 - 8	1 - 24
	Salida máxima de un solo puerto	30 W	30 W
	Salida máxima del conmutador	130 W	370 W
Protección contra rayos	Puerto RJ45	Modo común: 6 kV	
	Fuente de alimentación	Modo común: 6 kV; Modo diferencial: 4 kV	
Entorno de funcionamiento		Temperatura: 0°C - 40°C Humedad: (10 % - 90 %) HR, sin condensación	Temperatura: 0°C - 45°C Humedad: (10 % - 90 %) HR, sin condensación
Entorno de almacenamiento		Temperatura: -40°C - 70°C Humedad: (5 % - 90 %) HR, sin condensación	
Velocidad de transmisión de datos		Ethernet: 10 Mbps (dúplex medio) / 20 Mbps (dúplex completo) Fast Ethernet: 100 Mbps (dúplex medio) / 200 Mbps (dúplex completo) Gigabit Ethernet: 2000 Mbps (dúplex completo)	
Medios de transmisión		Ethernet: Cable CAT3 UTP/STP o superior Fast Ethernet: Cable CAT5 UTP/STP o superior Gigabit Ethernet: CAT5e o UTP/STP CAT6	
Estándares		IEEE 802.3, IEEE 802.3u, IEEE 802.3x, IEEE 802.3ab, IEEE 802.3z, IEEE 802.1d, IEEE 802.1p, IEEE 802.1q, IEEE 802.1w, IEEE 802.1s	

Spécifications — Français

Modèle		G5310P-8-150W	G5328P-24-410W
Port	Port RJ45 10/100/1000 Mbps	9	24
	Port SFP 1000 Mbps	1 port SFP indépendant	4 ports SFP indépendants
	Port de la console	/	1; Débit en Baud: 115200
Performance	Mode de commutation	Stockage et transmission	
	Apprentissage des adresses MAC	Auto vieillissement, auto apprentissage	
	Tableau des adresses MAC	16 K	
Dimensions (L x W x H)		294 mm x 179.6 mm x 44 mm	440 mm x 284 mm x 44 mm
Entrée AC		100 - 240V AC, 50/60Hz, 2A max	100 - 240V AC, 50/60Hz, 6A
Alimentation électrique PoE	Norme PoE	IEEE 802.3af, IEEE 802.3at	
	Âmes des câbles d'alimentation PoE	8 cœurs : la tension des noyaux 1, 2, 4, 5 est + et celle des noyaux 3, 6, 7, 8 est -.	
	Port PoE	1 - 8	1 - 24
	Sortie maximale d'un port unique	30 W	30 W
	Sortie maximale du commutateur	130 W	370 W
Protection contre la foudre	Port RJ45	Mode commun : 6 kV	
	Alimentation électrique	Mode commun : 6 kV; Mode différentiel : 4 kV	
Environnement opérationnel		Température : 0°C - 40°C Humidité : (10%~90%) RH, non-condensant	Température : 0°C - 45°C Humidité : (10%~90%) RH, non-condensant
Environnement de stockage		Température : -40°C - 70°C Humidité : (5%~90%) RH, non-condenslant	
Taux de transmission des données		Ethernet: 10 Mbps (semi duplex)/20 Mbps (duplex intégral) Fast Ethernet : 100 Mbps (semi duplex)/200 Mbps (duplex intégral) Gigabit Ethernet: 2000 Mbps (duplex intégral)	
Support de transmission		Ethernet: Câble CAT3 UTP/STP ou supérieur Fast Ethernet: Câble CAT5 UTP/STP ou supérieur Gigabit Ethernet: Câble CAT5e ou CAT6 UTP/STP	
Normes		IEEE 802.3, IEEE 802.3u, IEEE 802.3x, IEEE 802.3ab, IEEE 802.3z, IEEE 802.1d, IEEE 802.1p, IEEE 802.1q, IEEE 802.1w, IEEE 802.1s	

Dane techniczne — Polski

Model		G5310P-8-150W	G5328P-24-410W
Port	Port RJ45 10/100/1000 Mb/s	9	24
	Port SFP 1000 Mb/s	1 niezależny port SFT	4 niezależne porty SFT
	Port konsoli	/	1; Prędkość transmisji: 115200
Wydajność	Tryb przełączania	Zapis-i-wprzód	
	Nauka adresu MAC	Automatyczna pamięć adresów i chwili rejestracji	
	Tabela adresów MAC	16 K	
Wymiary (dł. x szer. x wys.)		294 mm x 179.6 mm x 44 mm	440 mm x 284 mm x 44 mm
Wejście AC		100 - 240V AC, 50/60Hz, 2A max	100 - 240V AC, 50/60Hz, 6A
System zasilania PoE	Standard PoE	IEEE 802.3af, IEEE 802.3at	
	Rdzeń kabla zasilającego PoE	8 rdzeni: napięcie rdzeni 1, 2, 4, 5 wynosi +, a rdzeni 3, 6, 7, 8 wynosi -.	
	Port PoE	1 - 8	1 - 24
	Maksymalna moc wyjściowa pojedynczego portu	30 W	30 W
	Maksymalna moc wyjściowa przełącznika	130 W	370 W
Ochrona przed piorunami	Port RJ45	Tryb wspólny: 6 kV	
	Zasilanie	Tryb wspólny: 6 kV; Tryb różnicowy: 4 kV	
Środowisko pracy		Temperatura: 0°C - 40°C Wilgotność: (10–90%) wilgotności względnej, bez kondensacji	Temperatura: 0°C - 45°C Wilgotność: (10–90%) wilgotności względnej, bez kondensacji
Środowisko przechowywania		Temperatura: -40°C - 70°C Wilgotność: (5–90%) wilgotności względnej, bez kondensacji	
Optymalizacja szybkości transmisji		Sieć Ethernet: 10 Mb/s (pół dupleks)/20 Mb/s (pełny dupleks) Szybka sieć Ethernet: 100 Mb/s (pół dupleks)/200 Mb/s (pełny dupleks) Gigabitowa sieć Ethernet: 2000 Mb/s pełny dupleks	
Środki transmisji		Sieć Ethernet: Kabel CAT3 UTP/STP lub lepszy Szybka sieć Ethernet: Kabel CAT5 UTP/STP lub lepszy Gigabitowa sieć Ethernet: Kabel CAT5e lub CAT6 UTP/STP	
Standardy		IEEE 802.3, IEEE 802.3u, IEEE 802.3x, IEEE 802.3ab, IEEE 802.3z, IEEE 802.1d, IEEE 802.1p, IEEE 802.1q, IEEE 802.1w, IEEE 802.1s	

Specificaţii — Română

Model		G5310P-8-150W	G5328P-24-410W
Port	Port RJ45 10/100/1000 Mbps	9	24
	Port SFP 1000 Mbps	1 port SPF independent	4 porturi SPF independente
	Port consolă	/	1; Rată Baud: 115200
Performanță	Switching mode	Store-and-forward	
	MAC address table learning	Auto aging, auto learning	
	MAC address table	16 K	
Dimensiuni (L x l x Î)		294 x 179.6 x 44 mm	440 x 284 x 44 mm
Intrare c.a.		100 - 240 V c.a., 50/60 Hz, 2 A maximum	100 - 240 V c.a., 50/60 Hz, 6 A
Alimentare PoE	PoE standard	IEEE 802.3af și IEEE 802.3at	
	Conductor cablu de alimentare PoE	8 conductori: tensiunea conductorilor 1, 2, 4, 5 este +, iar a onductorilor 3, 6, 7, 8 este -.	
	Port PoE	1 - 8	1 - 24
	Putere maximă per port	30 W	30 W
	Putere maximă totală a switch-ului	130 W	370 W
Protecție împotriva descărcărilor electrice	Port RJ45	Mod obișnuit: 6 KV	
	Sursa de alimentare	Mod obișnuit: 6 KV; Mod diferențial: 4 KV	
Mediu de operare		Temperatura: 0°C - 40°C Umiditate: (10% - 90%) umiditate relativă, fără condens	Temperatura: 0°C - 45°C Umiditate: (10% - 90%) umiditate relativă, fără condens
Mediu de depozitare		Temperatura: -40°C - 70°C Umiditate: (5% - 90%) umiditate relativă, fără condens	
Viteză de transmisie a datelor		Ethernet: 10 Mbps (semi duplex)/20 Mbps (duplex complet) Fast Ethernet: 100 Mbps (semi duplex)/200 Mbps (duplex complet) Ethernet Gigabit: 2000 Mbps (duplex complet)	
Mediu de transmitere		Ethernet: Cablu CAT3 UTP/STP sau o versiune mai nouă Fast Ethernet: Cablu CAT5 UTP/STP sau o versiune mai nouă Ethernet Gigabit: CAT5e sau CAT6 UTP/STP	
Standarde		IEEE 802.3, IEEE 802.3u, IEEE 802.3x, IEEE 802.3ab, IEEE 802.3z, IEEE 802.1d, IEEE 802.1p, IEEE 802.1q, IEEE 802.1w, IEEE 802.1s	

Specifikáció — Magyar

Modell		G5310P-8-150W	G5328P-24-410W
Portok	10/100/1000 Mb/s RJ45 port	9	24
	1000 Mb/s SFP port	1 szabad SFP port	4 szabad SFP port
	konzol csatlakozó felület	/	1; átviteli sebesség: 115200
Működés	Kapcsolási mód	Tárol és továbbít	
	MAC címtáblázat tanulás	Automatikus elhasználódás, öntanulás	
	MAC cím táblázat	16 K	
Méretek (H x Sz x M)		294 mm x 179.6 mm x 44 mm	440 mm x 284 mm x 44 mm
AC bemenet		100–240 V váltóáram, 50/60Hz 2 A maximum	100–240 V váltóáram, 50/60Hz 6 A
PoE tápellátás	PoE szabvány	IEEE 802.3af and IEEE 802.3at	
	PoE tápkábel erek száma	8 ér: az 1-es, 2-es, 4-es, 5-ös erek feszültsége + (pozitív); a 3-as, 6-os, 7-es, 8-as ereké pedig - (negatív).	
	PoE port	1 és 8 között	1 és 24 között
	Egyetlen port maximális kimenete	30 W	30 W
	A váltó maximális kimenete	130 W	370 W
Villámcsapás védelem	RJ45 port	Közös üzemmód: 6 kV	
	Tápellátás	Közös üzemmód: 6 kV; Differenciál üzemmód: 4 kV	
Működési környezet		Hőfok: 0°C - 40°C Páratartalom: 10 - 90% RH, nem kicsapódó	Hőfok: 0°C - 45°C Páratartalom: 10 - 90% RH, nem kicsapódó
Tárolási környezet		Hőfok: -40°C - 70°C Páratartalom: 5 - 90% RH, nem kicsapódó	
Átviteli sebesség optimalizálása		Ethernet: 10 Mb/s (fél duplex)/20 Mb/s (teljes duplex) Fast Ethernet: 100 Mb/s (fél duplex)/200 Mb/s (teljes duplex) Gigabit Ethernet: 2000 Mb/s (teljes duplex)	
Átviteli közeg		Ethernet: CAT3 UTP/STP vagy gyorsabb kábel Fast Ethernet: CAT5 UTP/STP vagy gyorsabb kábel Gigabit Ethernet: CAT5e vagy CAT6 UTP/STP	
Szabványok		IEEE 802.3, IEEE 802.3u, IEEE 802.3x, IEEE 802.3ab, IEEE 802.3z, IEEE 802.1d, IEEE 802.1p, IEEE 802.1q, IEEE 802.1w, IEEE 802.1s	

Özellikler — Türkçe

Model		G5310P-8-150W	G5328P-24-410W
Port	10/100/1000 Mbps RJ45 portu	9	24
	1000 Mbps SFP portu	1 bağımsız SFP portu	4 bağımsız SFP portu
	Konsol portu	/	1; Baud hızı: 115200
Performans	Anahtarlama modu	Sakla ve gönder	
	MAC adres öğrenme	Otomatik yaşlanma, otomatik öğrenme	
	MAC adres tablosu	16 K	
Boyutlar (B x E x Y)		294 mm x 179.6 mm x 44 mm	440 mm x 284 mm x 44 mm
AC giriş		100 - 240V AC, 50/60 Hz, 2 A maks	100 - 240V AC, 50/60 Hz, 6 A
PoE güç kaynağı	PoE standardı	IEEE 802.3af, IEEE 802.3at	
	PoE güç kablosu çekirdeği	8 çekirdek: Çekirdek 1, 2, 4, 5. İçin voltaj + ve çekirdek 3, 6, 7, 8 için voltaj -	
	PoE portu	1 - 8	1 - 24
	Tek bir portun maksimum çıkış gücü	30 W	30 W
	Switch'in maksimum çıkış gücü	130 W	370 W
Yıldırım koruması	RJ45 portu	Ortak mod: 6 kV	
	Güç kaynağı	Ortak mod: 6 kV; Diferansiyel mod: 4 kV	
Çalışma ortamı		Sıcaklık: 0°C - 40°C Nem: (%10 - %90) RH, yoğuşmasız	Sıcaklık: 0°C - 45°C Nem: (%10 - %90) RH, yoğuşmasız
Depolama ortamı		Sıcaklık: -40°C - 70°C Nem: (%5 - %90) RH, yoğuşmasız	
Veri iletim hızı		Ethernet: 10 Mbps (yarı çift yönlü) / 20 Mbps (tam çift yönlü) Fast Ethernet: 100 Mbps (yarı çift yönlü) / 200 Mbps (tam çift yönlü) Gigabit Ethernet: 2000 Mbps (tam çift yönlü)	
İletim Ortamları		Ethernet: CAT3 UTP/STP veya daha iyisi Fast Ethernet: CAT5 UTP/STP veya daha iyisi Gigabit Ethernet: CAT5e veya CAT6 UTP/STP	
Standartlar		IEEE 802.3, IEEE 802.3u, IEEE 802.3x, IEEE 802.3ab, IEEE 802.3z, IEEE 802.1d, IEEE 802.1p, IEEE 802.1q, IEEE 802.1w, IEEE 802.1s	

المواصفات — العربية

الطراز		G5310P-8-150W	G5328P-24-410W
المنفذ	منفذ RJ45 بسرعة 10/100/1000 ميجا بايت/ ثانية	9	24
	منفذ SFP بسرعة 1000 ميجا بايت / ثانية	1 منفذ SFP مستقل	4 منافذ SFP مستقلة
	منفذ وحدة التحكم	/	1؛ معدل سرعة تدفق البيانات خلال المودم : 115200
الأداء	نمط التحويل	نظام تبادل الرسائل	
	تعلم جدول عناوين MAC	تقادم تلقائي	
	جدول عناوين MAC	16 كيلو	
الأبعاد (الطول × العرض × الارتفاع)		294 مم × 179.6 مم × 44 مم	440 مم × 284 مم × 44 مم
مدخل تيار متردد		تيار متردد بجهد 100 - 240 فولت، 50/60 هرتز، 2 أمبير كحد أقصى	تيار متردد بجهد 100 - 240 فولت، 50/60 هرتز، 6 أمبير
إمداد الطاقة PoE (الطاقة عبر الإيثرنت)	معايير PoE (الطاقة عبر الإيثرنت)	IEEE 802.3af، IEEE 802.3at	
	نواة كابل نقل الطاقة PoE	8 أنوية: جهد الأنوية 1 و 2 و 4 و 5 بالموجب (+)، والأنوية 3 و 6 و 7 و 8 بالسالب (-)	
	منفذ PoE (الطاقة عبر الإيثرنت)	من 1 إلى 8	من 1 إلى 24
	أقصى قدرة ناتجة من منفذ واحد	30 واط	30 واط
	أقصى قدرة ناتجة من المحول	130 واط	370 واط
الوقاية من الصواعق	منفذ RJ45	النمط المشترك: 6 كيلو فوات	
	إمداد الطاقة	النمط المشترك: 6 كيلو فولت؛ نمط تفاضلي: 4 كيلو فولت	
بيئة التشغيل		درجة الحرارة: 0 درجة مئوية - 40 درجة مئوية الرطوبة: رطوبة نسبية (10% - 90%) ، بدون تكثف	درجة الحرارة: 0 درجة مئوية - 45 درجة مئوية الرطوبة: رطوبة نسبية (10% - 90%) ، بدون تكثف
بيئة التخزين		درجة الحرارة: - 40 درجة مئوية - 70 درجة مئوية الرطوبة: رطوبة نسبية (5% - 90%) ، بدون تكثف	
معدل نقل البيانات		إيثرنت: 10 ميجا بايت/ ثانية (إرسال نصف مزدوج) 20 ميجا بايت ثانية (إرسال كامل الازدواج) شبكة الإيثرنت السريعة 100 ميجا بايت/ ثانية (إرسال نصف مزدوج) 200 ميجا بايت/ ثانية (إرسال كامل الازدواج) إيثرنت ميجا بت 2000 ميجا بايت / ثانية (إرسال كامل الازدواج)	
وسط الإرسال		إيثرنت: CAT3 UTP/STP أو أفضل شبكة الإيثرنت السريعة CAT5 UTP/STP أو أفضل إيثرنت ميجا بت CAT5e أو CAT6 UTP/STP	
المعايير		IEEE 802.3, IEEE 802.3u, IEEE 802.3x, IEEE 802.3ab, IEEE 802.3z, IEEE 802.1d, IEEE 802.1p, IEEE 802.1q, IEEE 802.1w, IEEE 802.1s	

Safety and statement

CE

CE Mark Warning

This is a Class A product. In a domestic environment, this product may cause radio interference, in which case the user may be required to take adequate measures.
The mains plug is used as disconnect device, the disconnect device shall remain readily operable.

NOTE: (1) The manufacturer is not responsible for any radio or TV interference caused by unauthorized modifications to this equipment. (2) To avoid unnecessary radiation interference, it is recommended to use a shielded RJ45 cable.

FC

FCC Statement

This equipment has been tested and found to comply with the limits for a Class A digital device, pursuant to Part 15 of the FCC Rules. These limits are designed to provide reasonable protection against harmful interference when the equipment is operated in a commercial environment. This equipment generates, uses, and can radiate radio frequency energy and, if not installed and used in accordance with the instruction manual, may cause harmful interference to radio communications. Operation of this equipment in a residential area is likely to cause harmful interference in which case the user will be required to correct the interference at his own expense.
This device complies with Part 15 of the FCC Rules. Operation is subject to the following two conditions: (1) this device may not cause harmful interference, and (2) this device must accept any interference received, including interference that may cause undesired operation.

Caution!

Any changes or modifications not expressly approved by the party responsible for compliance could void the user's authority to operate the equipment.
NOTE: (1) The manufacturer is not responsible for any radio or TV interference caused by unauthorized modifications to this equipment. (2) To avoid unnecessary radiation interference, it is recommended to use a shielded RJ45 cable.

RECYCLING

This product bears the selective sorting symbol for Waste electrical and electronic equipment (WEEE). This means that this product must be handled pursuant to European directive 2012/19/EU in order to be recycled or dismantled to minimize its impact on the environment.

User has the choice to give his product to a competent recycling organization or to the retailer when he buys a new electrical or electronic equipment.